Cambridge International AS & A Level

Cambridge International Examinations
Cambridge International Advanced Subsidiary and Advanced Level

CANDIDATE NAME	
CENTRE NUMBER	
CANDIDATE NUMBER	

4393613873

PHYSICS **9702/33**

Paper 3 Advanced Practical Skills 1 **October/November 2016**

2 hours

Candidates answer on the Question Paper.

Additional Materials: As listed in the Confidential Instructions.

READ THESE INSTRUCTIONS FIRST

Write your Centre number, candidate number and name on all the work you hand in.
Write in dark blue or black pen.
You may use an HB pencil for any diagrams or graphs.
Do not use staples, paper clips, glue or correction fluid.
DO **NOT** WRITE IN ANY BARCODES.

Answer **both** questions.
You will be allowed to work with the apparatus for a maximum of one hour for each question.
You are expected to record all your observations as soon as these observations are made, and to plan the presentation of the records so that it is not necessary to make a fair copy of them.
You are reminded of the need for good English and clear presentation in your answers.

Electronic calculators may be used.
You may lose marks if you do not show your working or if you do not use appropriate units.

Additional answer paper and graph paper should be used only if it becomes necessary to do so.

At the end of the examination, fasten all your work securely together.
The number of marks is given in brackets [ ] at the end of each question or part question.

For Examiner's Use	
1	
2	
Total	

This document consists of **12** printed pages.

© UCLES 2016

CAMBRIDGE International Examinations

You may not need to use all of the materials provided.

1 In this experiment, you will investigate an electrical circuit.

(a) (i) Set up the circuit shown in Fig. 1.1.

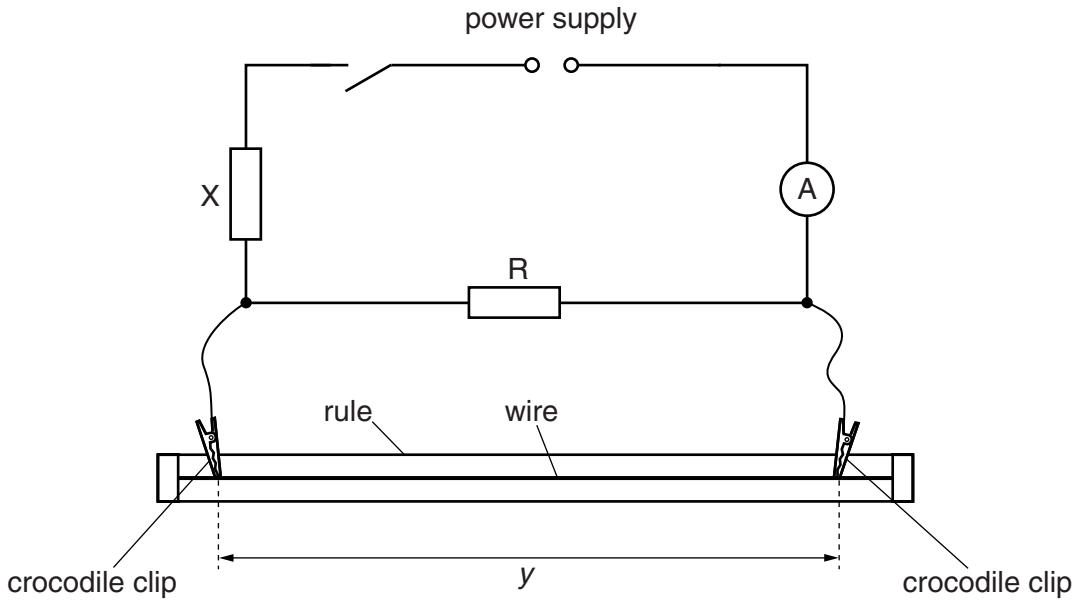

Fig. 1.1

The distance *y* between the crocodile clips should be approximately 80 cm.
The resistor in the component holder labelled R should have a resistance *R* of 10 Ω.

(ii) Record the value of *R*.

R = ... Ω

(iii) Measure and record *y*.

y = ...

(iv) Close the switch.

(v) Record the ammeter reading *I*.

I = ...[1]

(vi) Open the switch.

(b) (i) Remove the resistor in the component holder labelled R.
Select a different resistor labelled with a numerical value and connect it in the component holder labelled R.
Record the value of resistance *R*.

R = ... Ω

(ii) Close the switch.

(iii) Adjust the position of the crocodile clips on the wire until the ammeter reading I has the **same** value as in **(a)(v)**.

(iv) Measure and record *y*.

y = ...

(v) Open the switch.

(c) Repeat **(b)** until you have six sets of readings of R and y.

Include values of $\frac{1}{y}$ and $\frac{1}{R}$ in your table.

[10]

(d) (i) Plot a graph of $\frac{1}{y}$ on the y-axis against $\frac{1}{R}$ on the x-axis. [3]

(ii) Draw the straight line of best fit. [1]

(iii) Determine the gradient and y-intercept of this line.

gradient = ...

y-intercept = ...

[2]

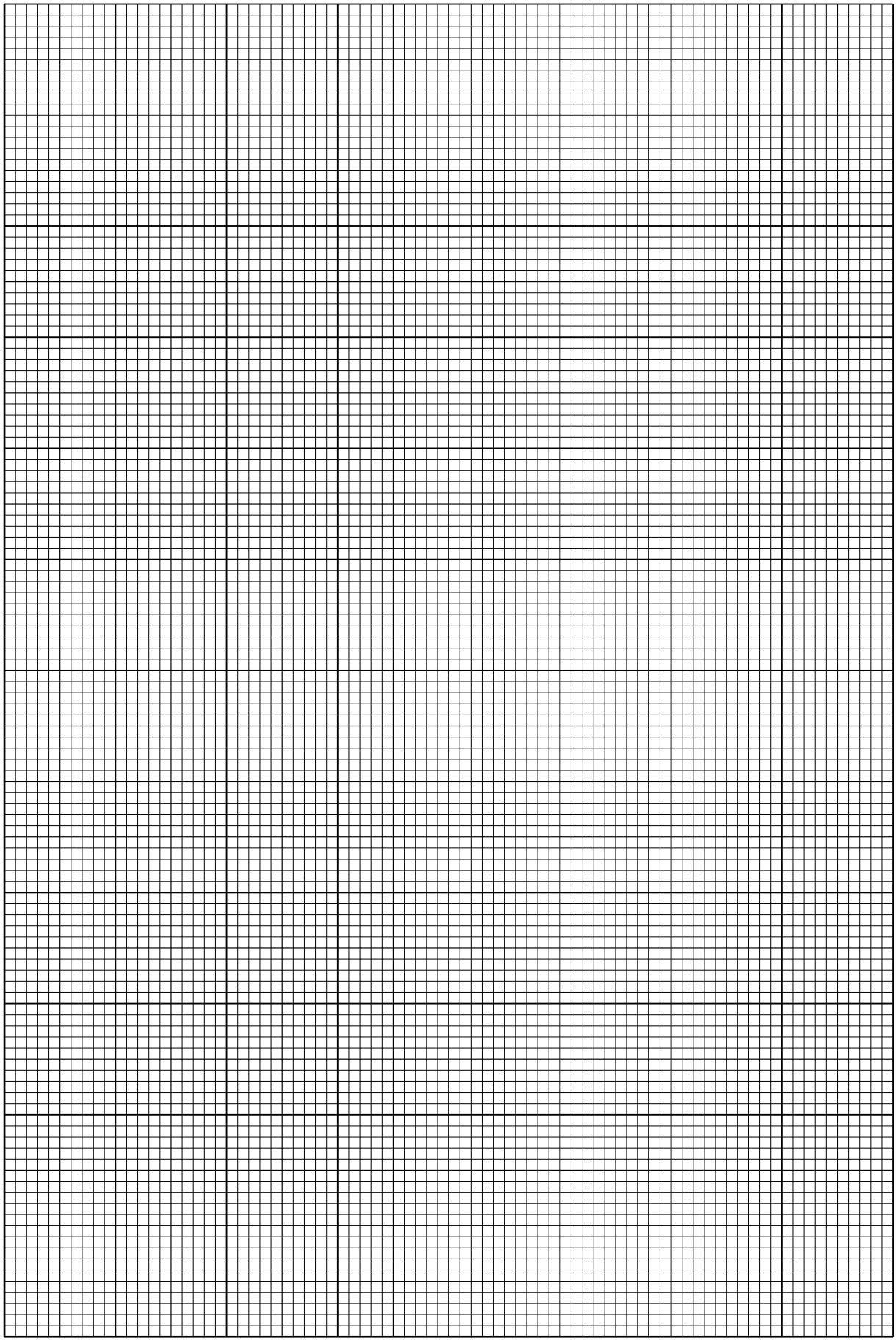

(e) The quantities y and R are related by the equation

$$\frac{1}{y} = -\frac{P}{R} + Q$$

where P and Q are constants.

Using your answers in **(d)(iii)**, determine values for P and Q.
Give appropriate units.

P = ...

Q = ...
[2]

(f) **(i)** The e.m.f. E of the d.c. power supply is given on the card.
Record E.

E = ...V

(ii) Theory suggests that

$$Q = \frac{PI}{E - XI}$$

where X is the resistance of resistor X.

Use values in **(a)(v)**, **(e)** and **(f)(i)** to determine the value of X.

X = ... Ω [1]

[Total: 20]

You may not need to use all of the materials provided.

2 In this experiment, you will investigate the motion of an oscillating mass.

(a) Set up the apparatus as shown in Fig. 2.1.

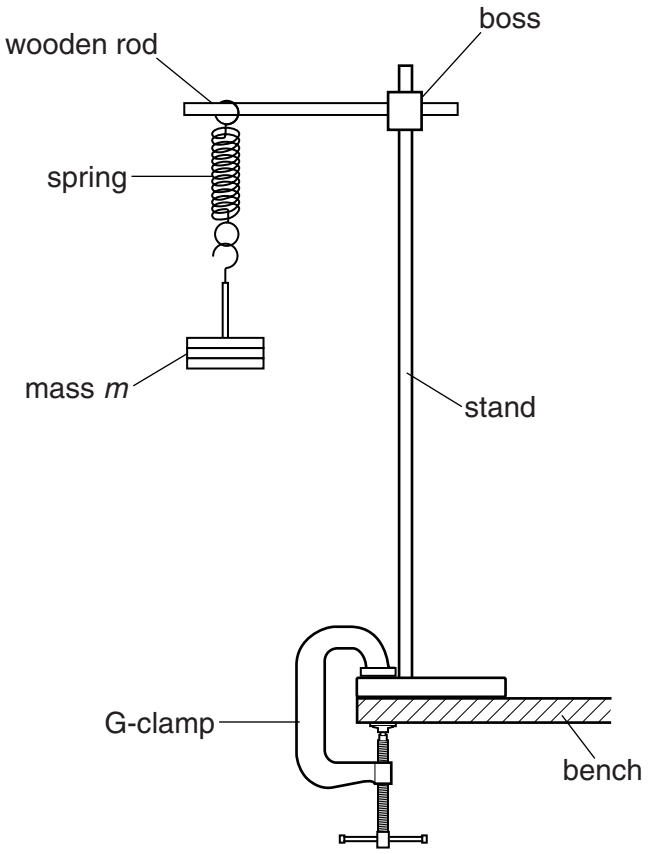

Fig. 2.1

The value of *m* should be 300 g.

(b) (i) Record m.

$m =$ .....

(ii) Pull the mass hanger down through a short distance.

Release the mass hanger and watch the vertical oscillations.

(iii) Take measurements to determine the period T of the vertical oscillations.

Record T. Your value of T should be less than 1 s.

$T =$ .....[2]

(c) (i) Calculate the value of l using the equation

$$l = \frac{gT^2}{\pi^2}$$

where $g = 9.81\,\text{m s}^{-2}$.

$l =$ .....m [1]

(ii) Justify the number of significant figures that you have given for your value of l.

.....

.....

.....[1]

(d) (i) Set up the apparatus shown in Fig. 2.2 using some of the string.

The length *d* is the distance from the top of the string to the centre of the masses.

Tie knots so that length *d* is approximately equal to your calculated value of *l*.

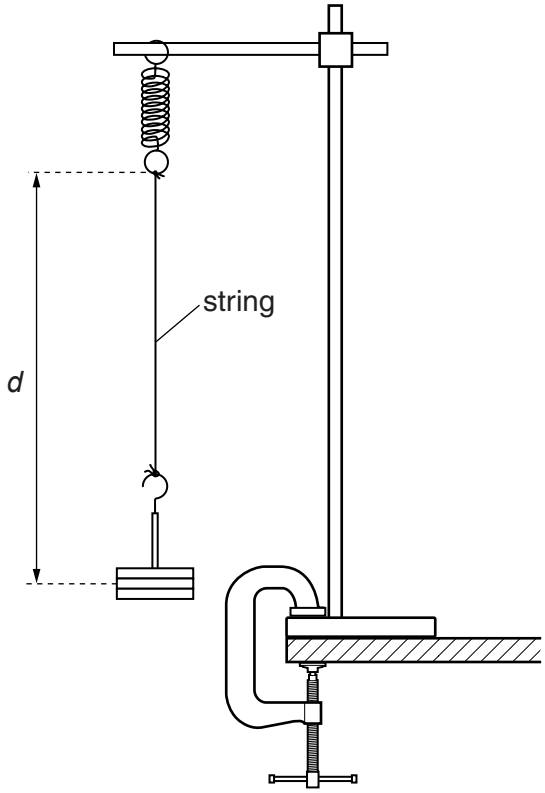

Fig. 2.2

(ii) Measure and record *d*.

d = ...m [1]

(iii) Estimate the percentage uncertainty in your value of *d*.

percentage uncertainty = ...[1]

(e) (i) Displace the mass approximately 10 cm to the right.

Release the mass. The mass will move to the left and back again.

Now ignore the movement of the mass and **watch the coils of the spring**.

Observe the coils moving further apart, then closer, further apart then closer.

At certain times the coils appear to stay the same distance apart.

(ii) Determine the time interval t between two consecutive times when the coils appear to stay the same distance apart.
Record t.

t = ...[1]

(iii) Remove the string from the mass and spring.

(f) Using a mass m of 400 g, set up the apparatus as shown in Fig. 2.1.
Repeat **(b)**, **(c)(i)**, **(d)(i)**, **(d)(ii)** and **(e)**.

m = ...

T = ...

l = ... m

d = ... m

t = ...
[3]

(g) It is suggested that the relationship between t and m is

$$t = km$$

where k is a constant.

(i) Using your data, calculate two values of k.

first value of k = ...

second value of k = ... [1]

(ii) Explain whether your results support the suggested relationship.

.....

.....

.....

.....[1]

(h) (i) Describe four sources of uncertainty or limitations of the procedure for this experiment.

1. .....

.....

2. .....

.....

3. .....

.....

4. .....

..... [4]

(ii) Describe four improvements that could be made to this experiment. You may suggest the use of other apparatus or different procedures.

1. .....

.....

2. .....

.....

3. .....

.....

4. .....

..... [4]

[Total: 20]

Permission to reproduce items where third-party owned material protected by copyright is included has been sought and cleared where possible. Every reasonable effort has been made by the publisher (UCLES) to trace copyright holders, but if any items requiring clearance have unwittingly been included, the publisher will be pleased to make amends at the earliest possible opportunity.

To avoid the issue of disclosure of answer-related information to candidates, all copyright acknowledgements are reproduced online in the Cambridge International Examinations Copyright Acknowledgements Booklet. This is produced for each series of examinations and is freely available to download at www.cie.org.uk after the live examination series.

Cambridge International Examinations is part of the Cambridge Assessment Group. Cambridge Assessment is the brand name of University of Cambridge Local Examinations Syndicate (UCLES), which is itself a department of the University of Cambridge.